Climate II Options

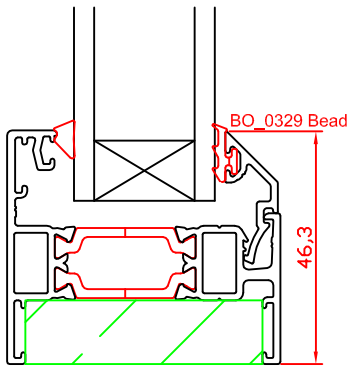

O_0336 Equal Leg Outer

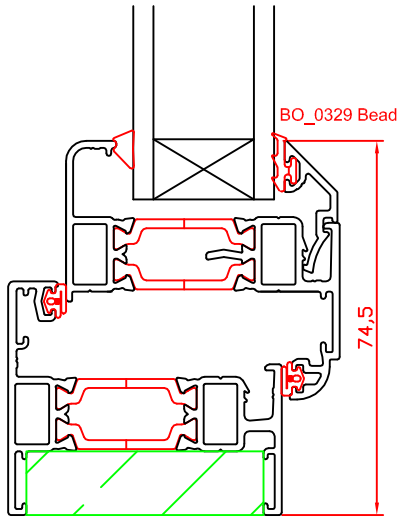

O_0336 Equal Leg to V_0333 Ovolo Vent

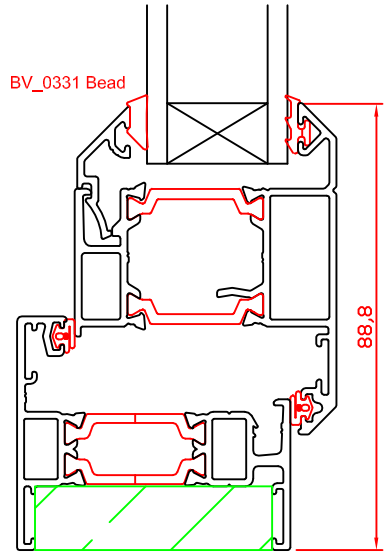

O_0336 Equal Leg to V_0357 Bevel Internal Vent

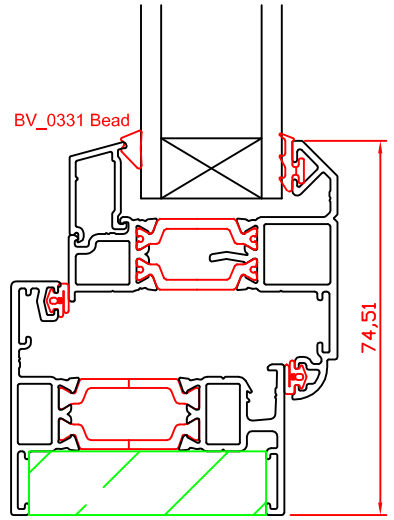

O_0336 Equal Leg to V_0358 Ovolo Internal Vent

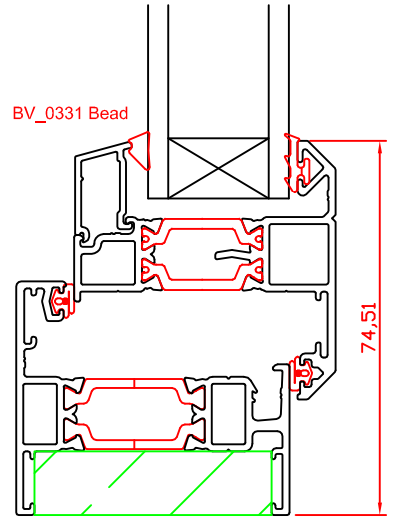

O_0336 Equal Leg to V_0358 Slim Bevel Internal Vent

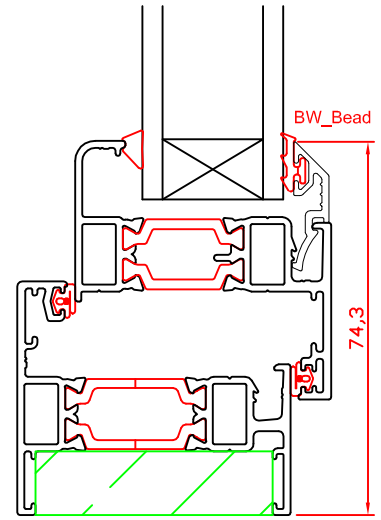

O_0336 Equal Leg to V_0337 Flat Vent

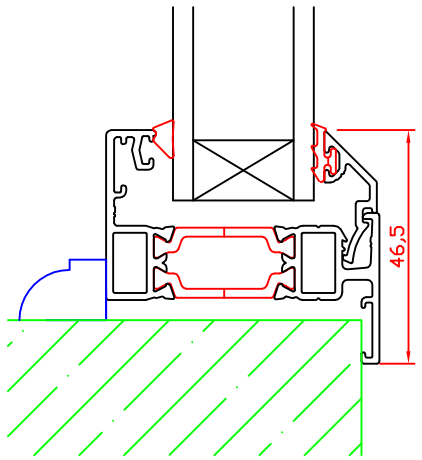

O_0338 Odd Leg Outer

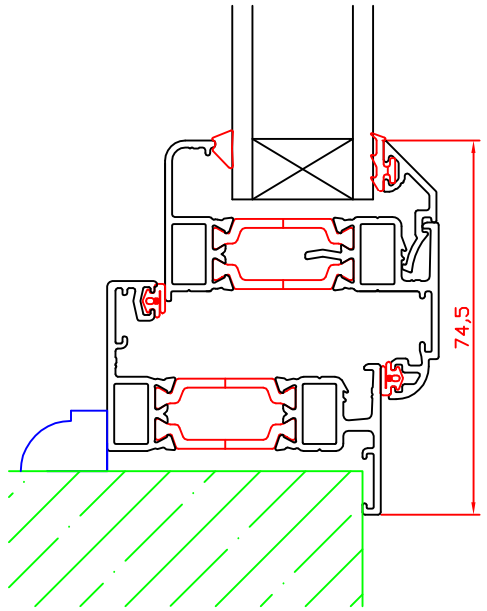

O_0338 Odd Leg to V_0333 Ovolo Vent

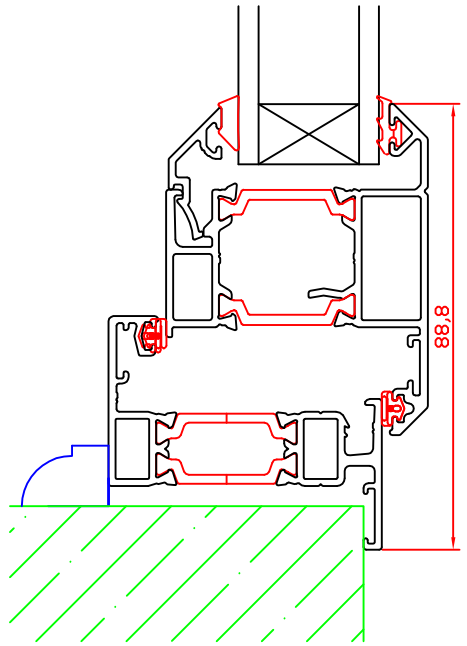

O_0338 Odd Leg to V_0357 Bevel Internal Vent

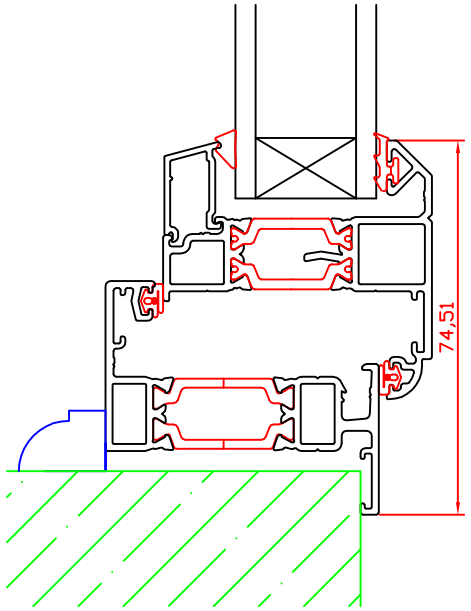

O_0338 Odd Leg to V_0358 Ovolo Internal Vent

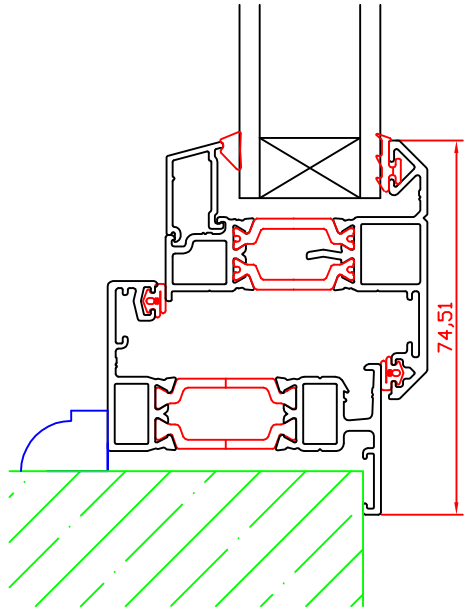

O_0338 Odd Leg to V_0356 Slim Bevel Internal Vent

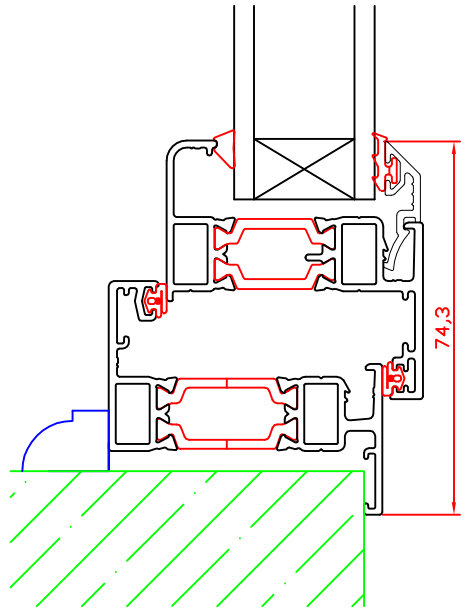

O_0338 Odd Leg to V_0337 Flat Vent

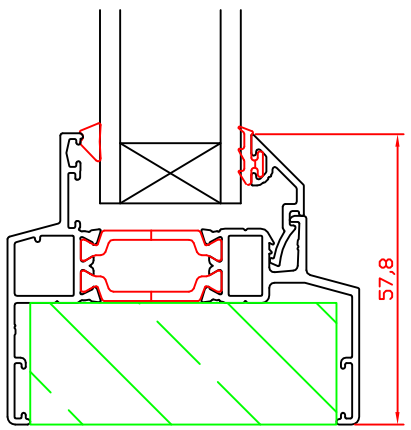

O_0329 Direct Fix Outer

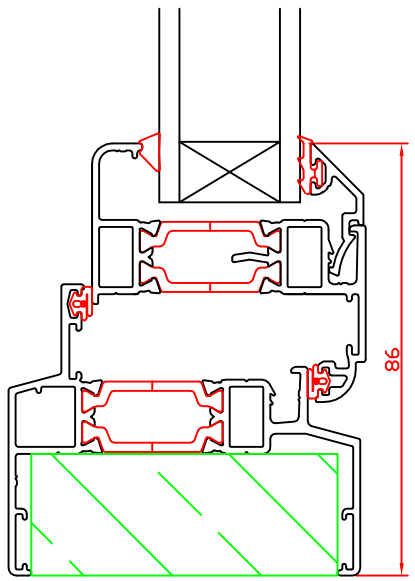

O_0329 Direct Fix to V_0333 Ovolo Vent

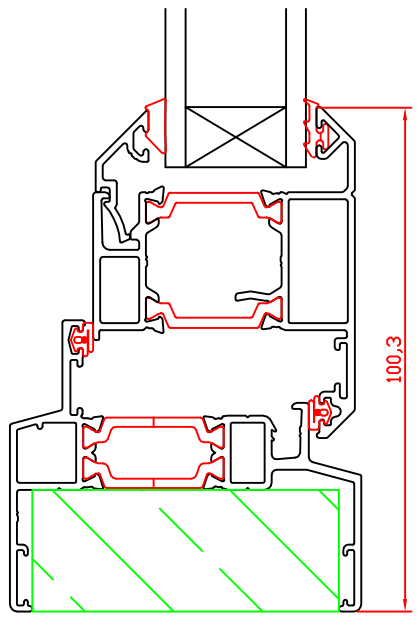

O_0329 Direct Fix to V_0357 Bevel Internal Vent

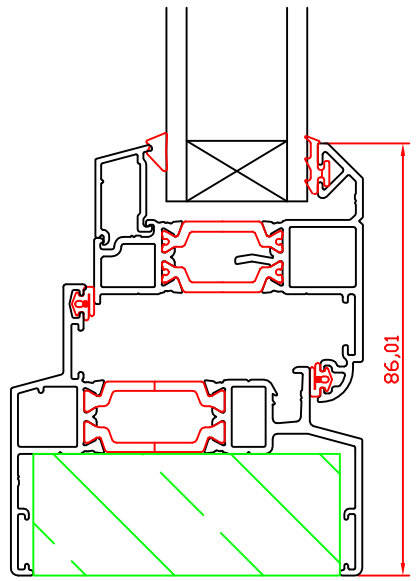

O_0329 Direct Fix to V_0358 Ovolo Internal Vent

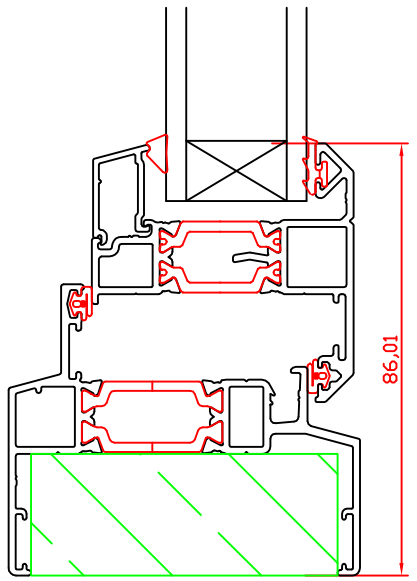

O_0329 Direct Fix to V_0356 Slim Bevel Internal Vent

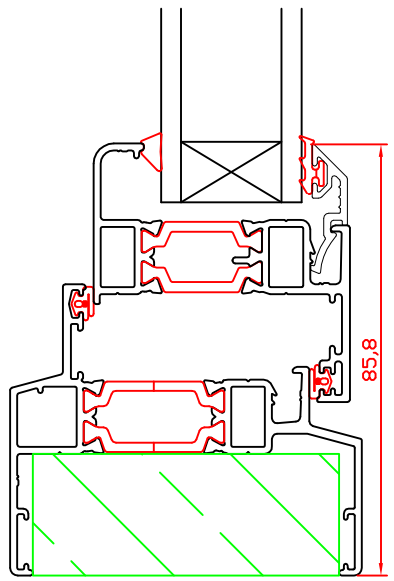

O_0329 Direct Fix to V_0337 Flat Vent